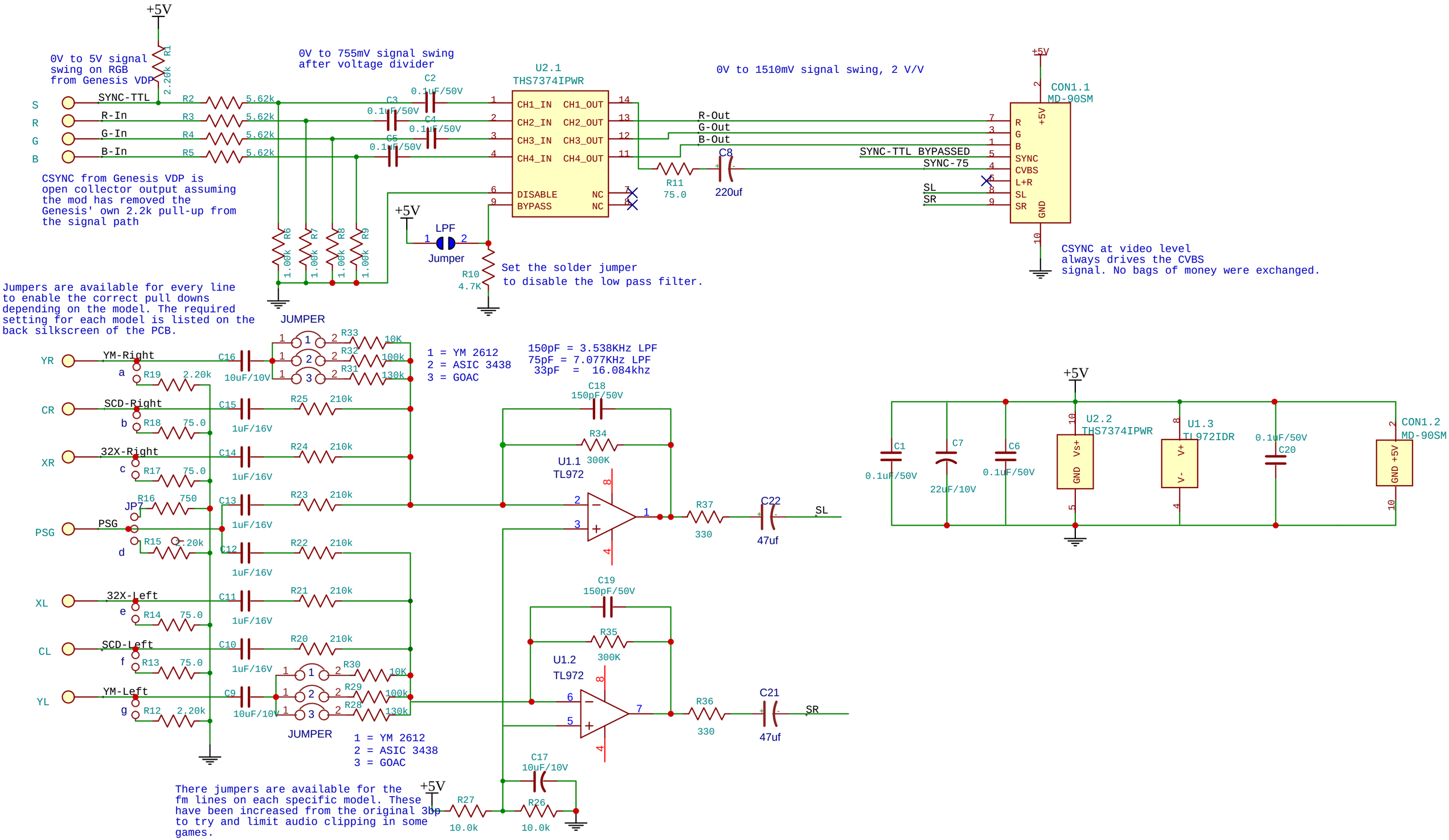

Mega Amp by ACE and Villahed94
https://tinyurl.com/y83uxgvv